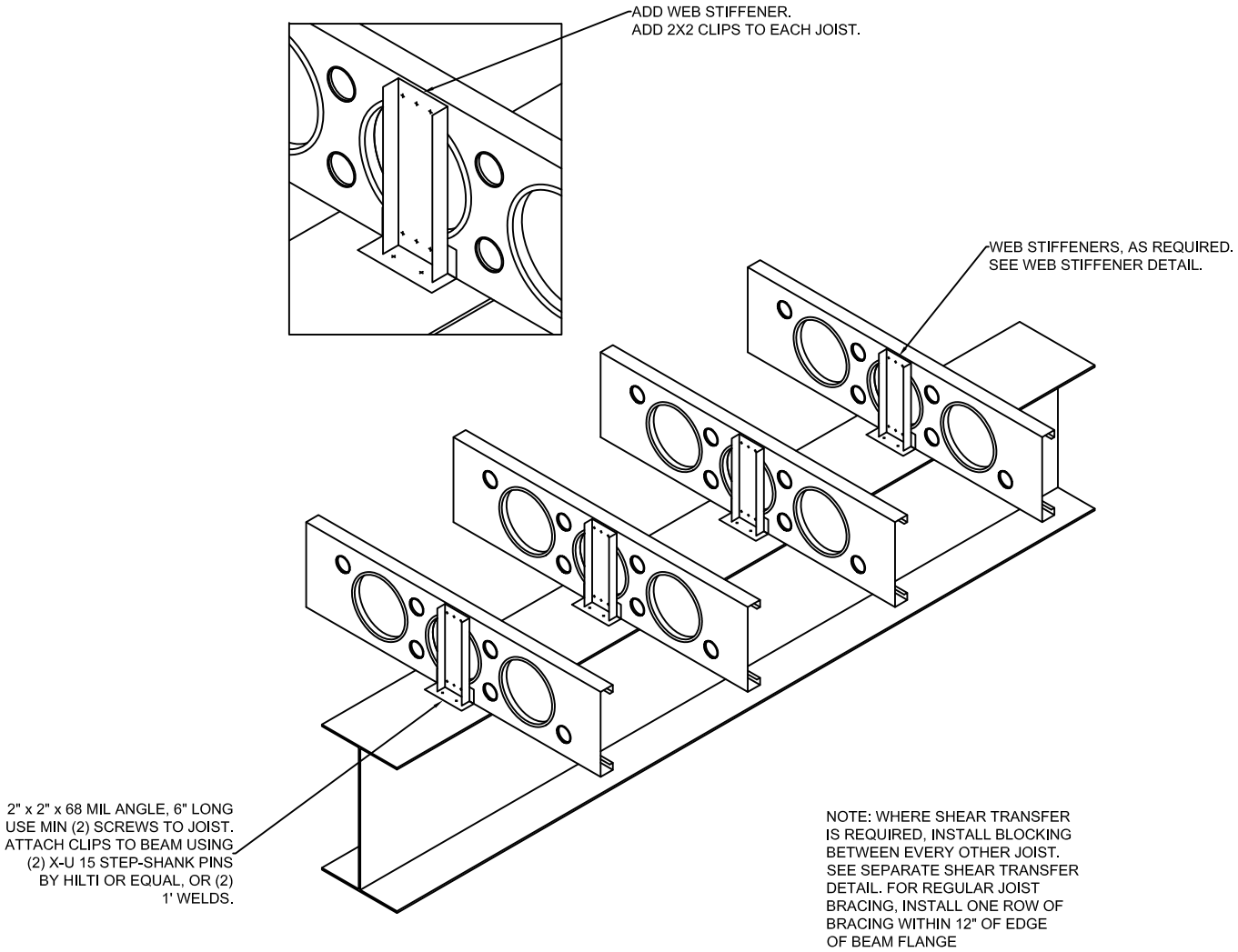

JOIST BEARING ON STEEL INTERIOR SUPPORT

Super Stud™ Building Products, Inc.